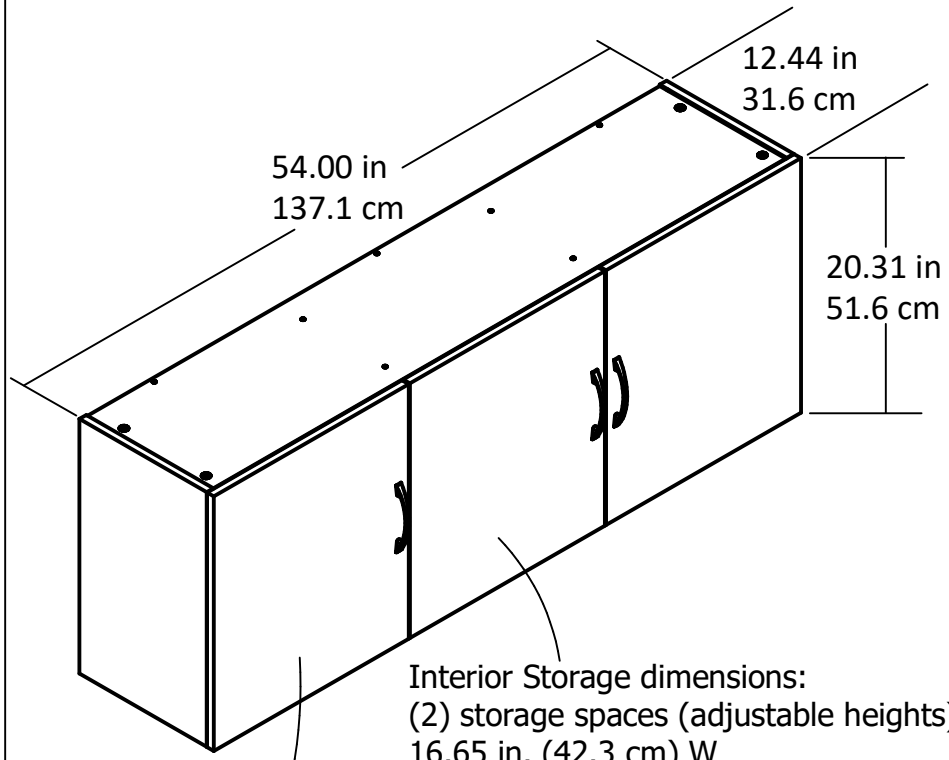

Interior Storage dimensions:
(2) storage spaces (adjustable heights)
16.65 in. (42.3 cm) W
18.82 in. (47.8 cm) H
10.69 in. (27.1 cm) D
1.94 cubic feet

Interior Storage dimensions:
(2) storage spaces (adjustable heights)
17.42 in. (44.2 cm) W
18.82 in. (47.8 cm) H
10.69 in. (27.1 cm) D
2.03 cubic feet

Wood Breakdown: 95%
Total storage: 6.00 cubic feet

Overall Product Size:
54.0"W x 12.44"D x 20.31"H
137.1cm W x 31.6cm D x 51.6cm H

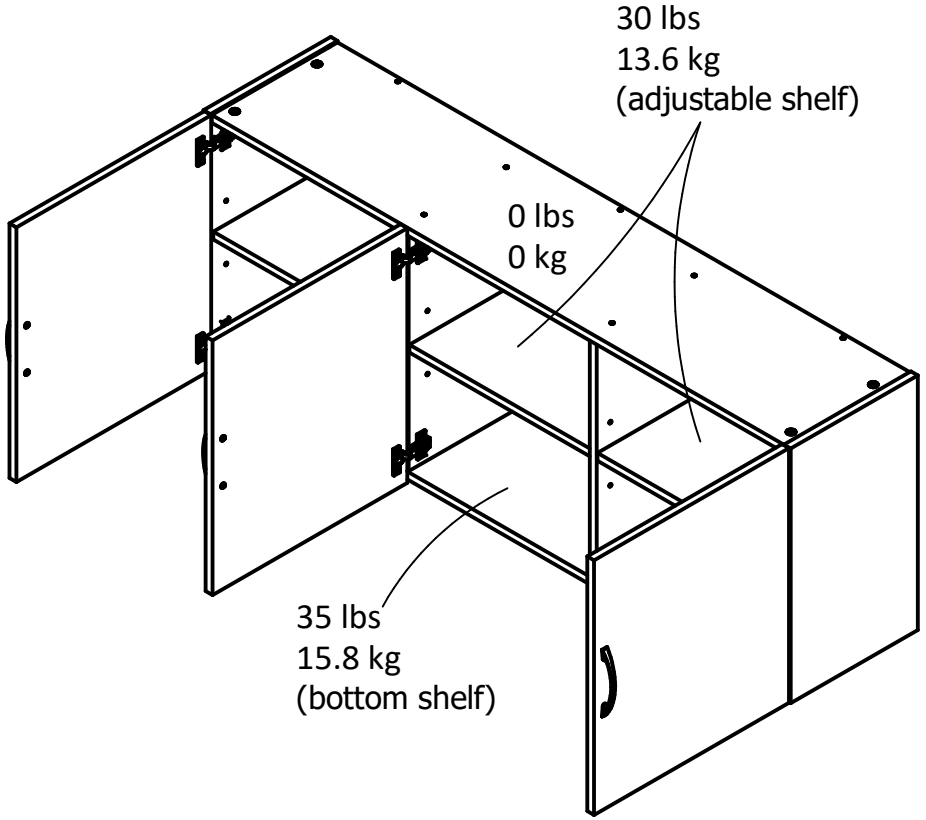

Maximum Weight Capacities
Unit Weight: 75 lbs. (34.1 kg)